Design and Control of Variable Stiffness Actuation Systems

G. Palli, G. Berselli, C. Melchiorri and G. Vassura

DEIS - DIEM - Università di Bologna - Viale Risorgimento 2, 40136 Bologna, Italy

{*gianluca.palli, giovanni.berselli, claudio.melchiorri, gabriele.vassura*}*@unibo.it*

Presentation Summary

In this presentation, several aspects related to the design of robots with variable stiffness actuation will be discussed considering both the mechanical and the control design point of view.

For what concerns the mechanical design, the aim is to show the advantages and the flexibility obtained with the adoption of compliant flexures for the implementation of variable stiffness joints for robotic applications. Our design solution is based on a very compact joint frame with two actuators in antagonistic configuration, see Fig. 1(a) for an exploded view drawing. The actuators are connected to the moveable link by means of a couple of Compliant Transmission Elements (CTEs), one CTE for each actuator. In this way, by changing the CTEs several different joint stiffness characteristics can be implemented.

A systematic procedure for the synthesis of a monolithic CTE that allows the achievement of the desired joint stiffness is discussed. The proposed design procedure permits to specify: (1) the desired joint stiffness range; (2) a suitable joint deflection/torque relation; (3) the maximum joint deflection from the rest conditions. The selection of the stiffness profile has been made in order to obtain suitable simplification of the control strategy. Then, the parameters that define the structure of the CTE are generated by means of an optimization procedure. With the aim of evaluating the performances of the proposed design procedure, the deflection/torque relation given as design specification is then compared both with the analytical characteristic of the pseudo-rigid body model of the CTE and with the data obtained from the FEM analysis. To demonstrate the feasibility of the proposed design methodology, a preliminary prototype of the CTE is presented, see Fig. 1(b). Current activities are devoted to the experimental verification of the CTE characteristics.

Then, some issues related to the control of robotic manipulators with relevant and programmable variable joint stiffness are analyzed. To this end, the control strategies proposed in [1], [2], [3] are taken in consideration, and some crucial aspects are analyzed and suitable solutions are proposed. The discussion is centered on: (1) the sensory requirements and the state observation; (2) the controller structure and complexity; (3) the robustness with respect to uncertainties in the robot dynamics and environmental disturbances.

Finally, some open problems related to the discussed points will be outlined.

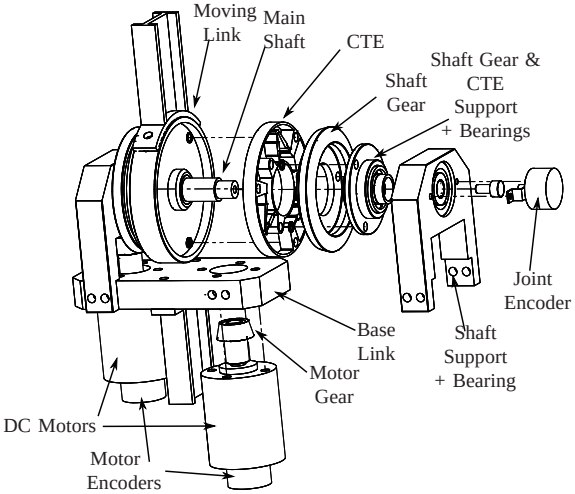

(a) Exploded view of the variable stiffness joint.

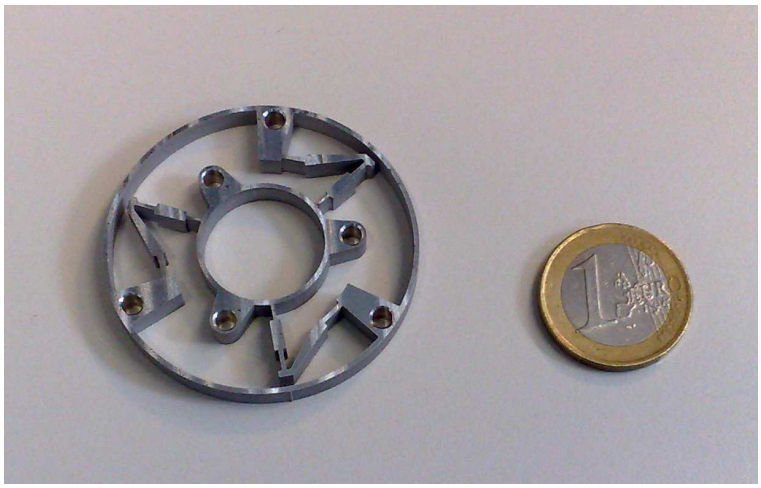

(b) Preliminary prototype of the compliant transmission element manufactured in aluminum 7075-T6 by means of wire electro-erosion.

Fig. 1. Details on the mechanical design of the variable stiffness joint.

Biography

Dr. Gianluca Palli works as researcher at the Laboratory of Automation and Robotics (LAR) of the University of Bologna. His research activity is focused mainly on robotics, and in particular on the design and control of complex mechatronic systems such as anthropomorphic robotic hands, on the force control in presence of static and dynamic friction and on the design and control of kinematic chains with flexible links and elastic joints.

Dr. Giovanni Berselli works as researcher at the Department of Mechanical Engineering of the University of Bologna. His research activity is focused on the design of compliant mechanisms, soft covers for robotic limbs and compliant actuators based on dielectric elastomers.

Claudio Melchiorri is Professor of Robotics at the University of Bologna. Its research interests are in the area of robotics (anthropomorphic hands, telemanipulation, haptics, sensors, ...) and control (passive control, hw/sw control systems, nonlinear control, ...). He has published more than 200 articles and 12 books on these subjects.

Gabriele Vassura is Associate Professor at the University of Bologna. Its research interests are in the area of robotics and mechatronics and, in particular, design of dexterous robotic hands.

REFERENCES

[1] G. Palli, C. Melchiorri, T. Wimböck, M. Grebenstein, and G. Hirzinger, "Feedback linearization and simultaneous stiffness-position control of robots with antagonistic actuated joints," in *IEEE Int. Conf. on Robotics and Automation*, 2007.

[2] G. Palli, C. Melchiorri, and A. De Luca, "On the feedback linearization of robots with variable joint stiffness," in *Proc. of the IEEE Int. Conf. on Robotics and Automation*, 2008.

[3] G. Palli and C. Melchiorri, "Robust control of robots with variable joint stiffness," in *Proc. Int. Conf. on Advanced Robotics*, Munich, Germany, 2009.